# CE 366 – SITE INVESTIGATION (Problems & Solutions)

## P1. DEPTH OF EXPLORATION

**Question:**

Find the depth of exploration from ground level for the 30x50 m, 15 storey building.

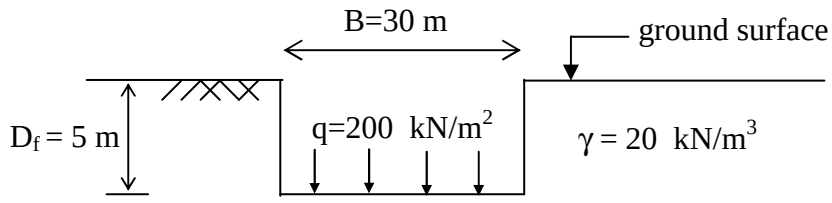


**Solution:**

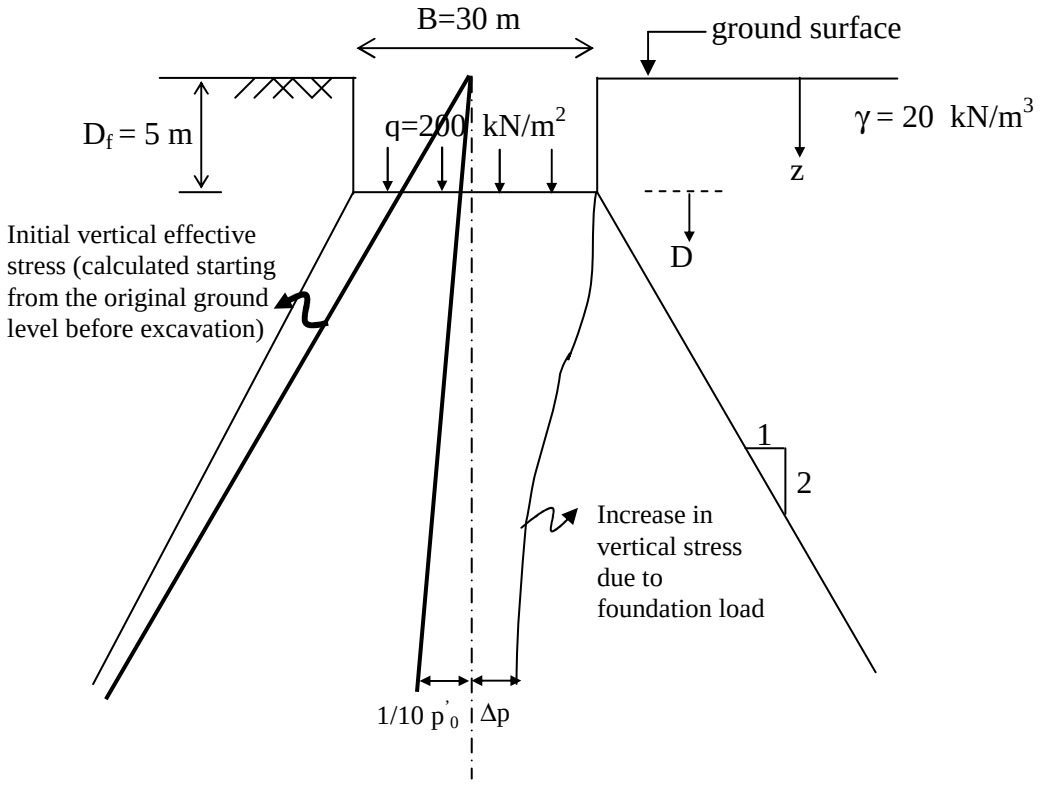


Depth of exploration should reach such a depth where vertical stress increase due to weight of the structure would approximately be equal to the 10% of the initial effective overburden pressure:

De Beer's rule $\Rightarrow \therefore \frac{1}{10} p_0' = \Delta p$

$$\Delta p = \frac{200x30x50(kN)}{(30+D)(50+D)}$$

$$\frac{1}{10} p_0' = \frac{1}{10}(20(D+5))$$

$$\frac{200\text{x}30\text{x}50}{(30+\text{D})(50+\text{D})} = \frac{1}{10}\text{x}20(\text{D}+5)$$

$$2\text{D}^3 + 170\text{D}^2 + 3800\text{D} = 285000$$

D=28 m

Thus, depth of exploration, z =28+5=**33 m** from ground level

## P2. CONE PENETRATION TEST (CPT)

**Question:**

**Table 1. CPT Data**

| Depth (m) | $q_c$ (MPa) | $q_s$ (kPa) |
|---|---|---|
| 0.5 | 1.86 | 22.02 |
| 1.5 | 1.16 | 28.72 |
| 2.5 | 2.28 | 24.89 |
| 3.5 | 0.29 | 12.44 |
| 4.5 | 0.38 | 15.32 |
| 5.5 | 0.40 | 14.74 |
| 6.5 | 6.90 | 28.72 |
| 7.5 | 9.20 | 26.81 |
| 8.5 | 8.45 | 43.09 |
| 9.5 | 9.50 | 34.60 |

- Indicate the soil classification by depth.
- Plot the cone penetration test data given in Table 1 including friction ratio $F_R$.
- Estimate undrained shear strength at depth 5.5 m assuming the cone factor $N_k$=18.
- Estimate angle of shearing resistance of the soil ($\phi'$) at depth 7.5 m using the graph given in Figure 1.

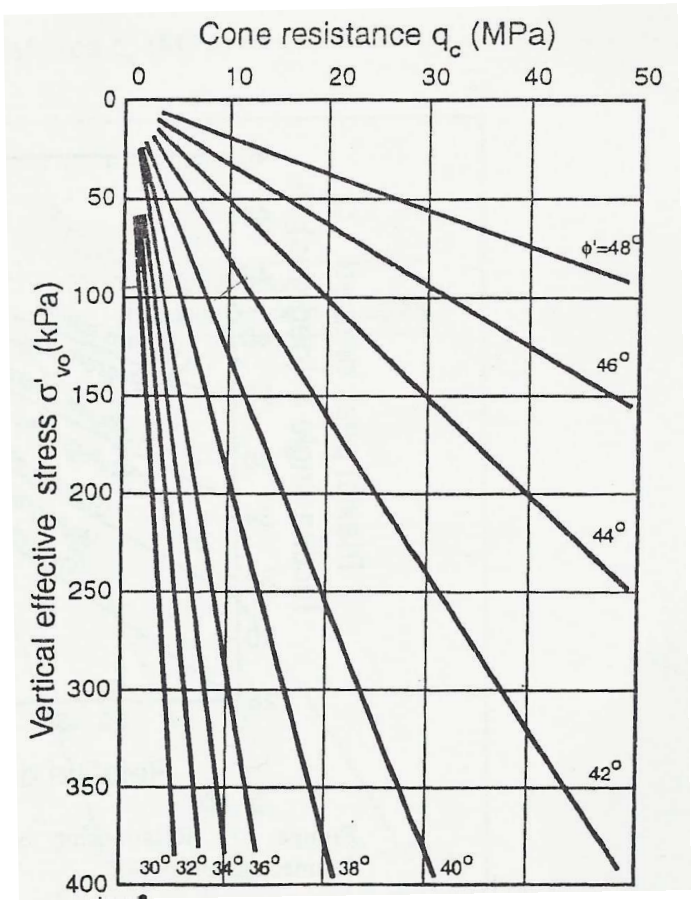


**Figure 1. Correlation between cone data and angle of internal friction (Robertson and Campanella, 1983)**

Assume an average $\gamma$=16.5 kN/m$^3$ to GWT at depth 3 m, and $\gamma_{sat}$=19.8 kN/m$^3$ for below GWT.

**Solution:**

| **Depth (m)** | **$q_c$ (MPa/kPa)** | **$q_s$ (kPa)** | **$F_R$ (%)*[1]** | **Soil Classification*[2]** |
|---|---|---|---|---|
| 0.5 | 1.86 / 1860 | 22.02 | 1.19 | Silt Mixtures – clayey silt to silty clay |
| 1.5 | 1.16 / 1160 | 28.72 | 2.48 | Clay – silty clay to clay |
| 2.5 | 2.28 / 2280 | 24.89 | 1.09 | Sand Mixtures – silty sand to sandy silt |
| 3.5 | 0.29 / 290 | 12.44 | 4.29 | Clay – silty clay to clay |
| 4.5 | 0.38 / 380 | 15.32 | 4.03 | Clay – silty clay to clay |
| 5.5 | 0.40 / 400 | 14.74 | 3.69 | Clay – silty clay to clay |
| 6.5 | 6.90 / 6900 | 28.72 | 0.42 | Sands – clean sand to silty sand |
| 7.5 | 9.20 / 9200 | 26.81 | 0.29 | Sands – clean sand to silty sand |
| 8.5 | 8.45 / 8450 | 43.09 | 0.51 | Sands – clean sand to silty sand |
| 9.5 | 9.50 / 9500 | 34.60 | 0.36 | Sands – clean sand to silty sand |

*[1]: Note that; $F_R\ (\%) = \frac{q_s}{q_c} x100$

*[2]: Soil classification is obtained by using Figure 2.19 in lecture notes.

- Plot of the Cone Penetration Test data (CPT) is shown in Figure 2.

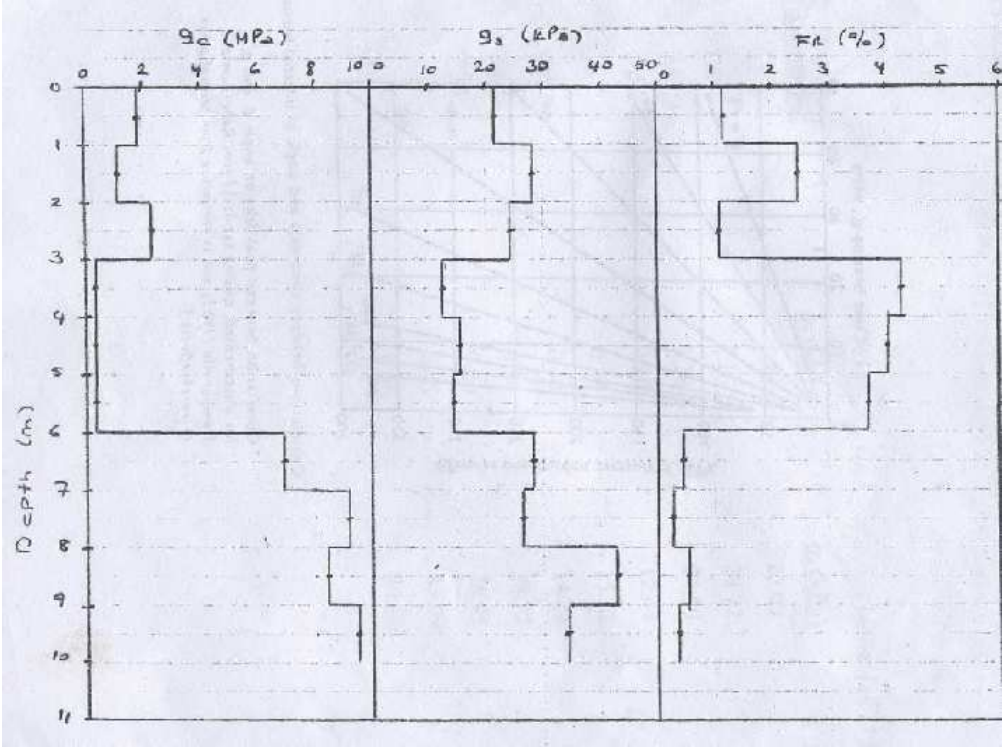


**Figure 2. Plot of CPT data**

- Estimate undrained shear strength at depth 5.5 m assuming the cone factor $N_k$=18.

$$c_u = \frac{q_c - p_o}{N_k}$$

where; $p_o$ is total overburden pressure at the level of cone tip

Since $\gamma_d$=16.5 kN/m$^3$ and $\gamma_{sat}$=19.8 kN/m$^3$ then,

$$p_o = 3x16.5 + 2.5x19.8 = 99 \text{ kPa}$$

$$c_u = \frac{400-99}{18} = 16.7\ kPa \text{ (@ z = 5.5 m)}$$

- Estimate $\phi'$ at depth 7.5 m from Figure 1 where $p'_o$= effective overburden pressure;

$(p'_o @ z = 7.5 m) = [3 \times 16.5] + [4.5 \times (19.8-9.8)] = 94.5$ kPa

$(q_c @ z = 7.5 m) = 9.2$ MPa

□ **= 41°**

**P3. STANDARD PENETRATION TEST (SPT)**

**Question:**

Referring to Table 2 given below estimate the SPT-$N_1$ value you would use for a footing which is 2 x 2 m in dimensions and located at 2 m depth. Assume the unit weight of both sands is 18.1 kN/m$^3$ and 19.7 kN/m$^3$ above and below ground water table, respectively. GWT is at 6 m depth. Assume that the given N values are corrected for energy efficiency and field procedures.

**Table 2. SPT Data**

| Depth (m) | $N_{field}$ | Soil Type |
|---|---|---|
| 1 | 6 | Coarse Sand |
| 2 | 9 | Coarse Sand |
| 3 | 10 | Coarse Sand |
| 4 | 8 | Coarse Sand |
| 5 | 7 | Coarse Sand |
| 6 | 9 | Coarse Sand |
| 7 | 22 | Silty fine sand |
| 8 | 28 | Silty fine sand |
| 9 | 31 | Silty fine sand |

**Solution:**

| Depth (m) | N | Soil Type | Silty Sand Correction, $N'$ *1 | $p'_0$ (kPa) *2 | $C_N$ *3 | $N_1$ *4 |
|---|---|---|---|---|---|---|
| 1 | 6 | Coarse Sand | 6 (no correction) | 18.1 | 2.00 | 12 |
| 2 | 9 | Coarse Sand | 9 (no correction) | 36.2 | 1.63 | 15 |
| 3 | 10 | Coarse Sand | 10 (no correction) | 54.3 | 1.33 | 13 |
| 4 | 8 | Coarse Sand | 8 (no correction) | 72.4 | 1.15 | 9 |
| 5 | 7 | Coarse Sand | 7 (no correction) | 90.5 | 1.03 | 7 |
| 6 | 9 | Coarse Sand | 9 (no correction) | 108.6 | 0.94 | 8 |
| 7 | 22 | Silty fine sand | 18.5≈19 | 118.3 | 0.90 | 17 |
| 8 | 28 | Silty fine sand | 21.5≈22 | 128.0 | 0.86 | 19 |
| 9 | 31 | Silty fine sand | 23 | 137.7 | 0.83 | 19 |

*1: **Silty sand correction**: SPT-N values should be corrected for the increased resistance due to negative excess pore water pressure.

Applied when all three conditions are satisfied simultaneously:

(i) When the test is carried out in very fine sand or silty sand

(ii) When the test is carried out below ground water table

(iii) When N is greater than 15 (N > 15)

$$N' = 15 + \tfrac{1}{2}(N-15)$$

Where;

$N'$: Silty sand corrected SPT-N value

*Note that N' values should always be reported as rounded to the nearest integer.*

**[*2]: Overburden correction ($C_N$):**

$$N_1 = N \times C_N$$

Where;

$C_N$: values are determined using equation 2.3 in Lecture Notes (page 31)

$$C_N = 9.78 \cdot \sqrt{\frac{1}{\sigma'_v (kN/m^2)}} \leq 2.00$$

N: is equal to N' if silty sand correction is applicable.

*Note that $N_1$ values should always be reported as rounded to the nearest integer.*

In order to estimate SPT-$N_1$ value to be used in calculations for a foundation, the SPT-$N_1$ values in depth interval of 0.5B above and 2B below the foundation level should be considered (where B = foundation width).

0.5B above 0.5 x 2 = 1 m above foundation level
2B below 2 x 2 = 4 m below foundation level
} Depth interval is in between z = 1 m and z = 6 m.

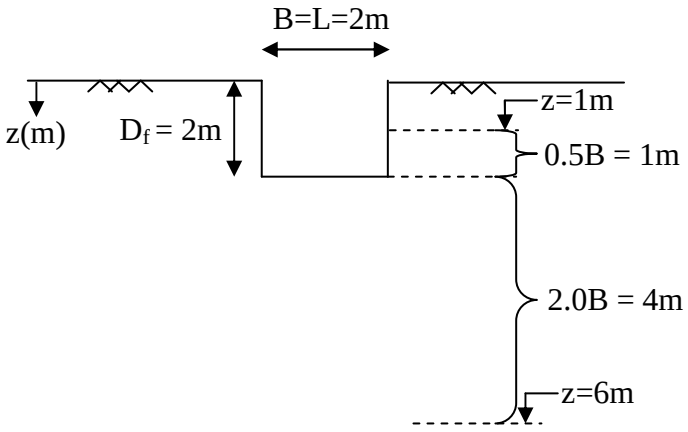


Within this depth interval the weighted average of SPT-$N_1$ can be used solely for the analysis of given footing.

$$N_{1,av} = \frac{(12+15+13+9+7+8)}{6} = 11$$

## P4. PLATE LOAD TEST (FIELD LOAD TEST)

### a. Footing on Clay (load test on clay)

**Question:**

The results of a plate load test in stiff clay are shown in the Figure 3. The size of the test plate is 0.305 m x 0.305 m. Determine the size of a square column footing that should carry a load of 2500 kN. (FS = 2.0; maximum permissible settlement is 40 mm)

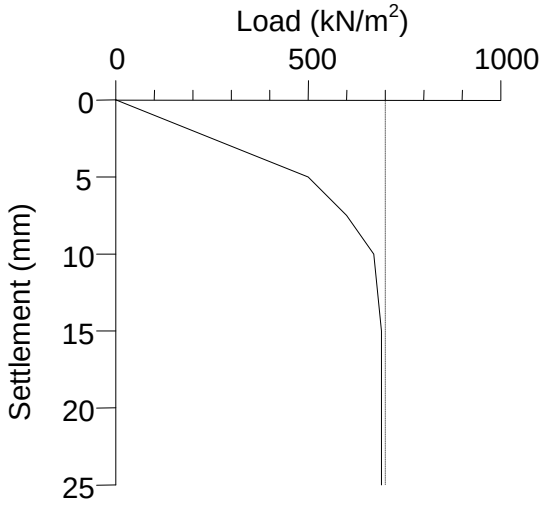


**Figure 3. Plate load test in stiff clay**

**Solution:**

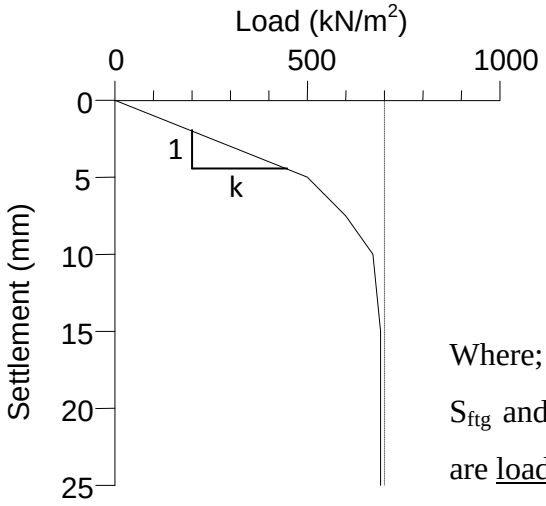


Cohesive Soil

$(q_{ult})_{ftg} = (q_{ult})_{test}$

$$S_{ftg} = S_{test} \times \frac{B}{b}$$

Where;

$S_{ftg}$ and $S_{test}$ : settlements of footing and test plate which are loaded with the same pressure, respectively.

B (or $B_F$ such as in Lecture Notes): width of footing

b (or $B_P$ such as in Lecture Notes): width of test plate

$$(q_{ult})_{test} = 700\ kN/m^2 = (q_{ult})_{ftg}$$

$$q_{all} = \frac{700}{FS = 2.0} = 350kPa \Rightarrow \frac{2500}{BxB} = 350 \Rightarrow B = 2.7m$$

$$S_{ftg} = \underbrace{\frac{350x5}{500}}_{S_{test}\text{ under 350 kPa loading}} x \frac{2.7}{0.305} = 31mm < 40mm$$

Settlement calculation, however, is not very reliable; because it can not represent consolidation settlement. Generally, bearing capacity criteria governs, not the settlement, in the design of foundations resting on clays.

Coefficient of subgrade reaction: $k = \frac{q}{S}$ (kN / $m^3$) (k is the slope of q vs S graph, for more information about "k" see Lecture Notes p.112-113 or Ordemir p. 28)

$$k_{test} = \frac{500}{0.005} = 100000\ kN/m^3 = 100MN/m^3$$

**b. Load test on sand**

**Question:**

The results of a plate load test in a sandy soil are shown in the Figure 4. Size of the test plate: 0.305 m x 0.305 m. Determine the size of square footing that should carry a load of 2500 kN with a maximum permissible settlement of 40 mm.

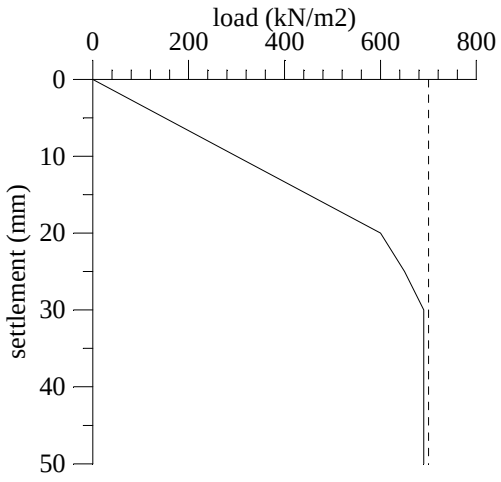


**Figure 4. Plate load test in sandy soil**

**Solution:**

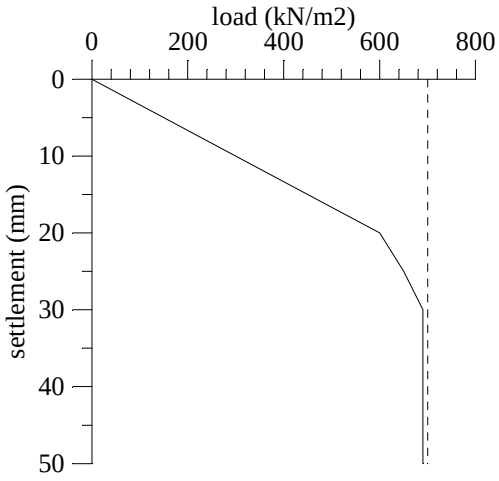


Cohesionless Soils

$(q_{ult})_{ftg} = (q_{ult})_{test} \times \frac{B}{b}$

$S_{ftg} = S_{test}\left[\frac{B(b+0.3)}{b(B+0.3)}\right]^2$ (For typical plate dimension, b=0.3 m, this becomes equation 2.13 page 52 in Lecture Notes)

B and b are in meters!

| Q (kN) | Assumed B (m) | $q=Q/B^2$ (kPa) | $S_{test}$ (mm) | $S_{ftg}$ (mm) |
|---|---|---|---|---|
| 2500 | 4 | 156 | 5.2 (20/600x156) | 17.7<40 |
| | 3 | 278 | 9.3 | 30.2<40 |
| | 2.5 | 400 | 13.3 | 41.7>40 |
| | 2.6 | 370 | 12.3 | 38.9 |
| | 2.55 | 384 | 12.8 | 40.4 |

Square column footing of 2.55 x 2.55 m dimensions will be appropriate.

-OR-

$$S_{ftg} = 40 = \underbrace{\frac{2500}{B^2} x \frac{20}{600}}_{S_{test}} \times \left[\frac{B(0.305+0.3)}{0.305(B+0.3}\right]^2 \Rightarrow B = 2.56m$$

Thus,

$$q_{ftg} = q_{test} x \frac{B}{b} = 700x\frac{2.55}{0.305} = 5852 kN/m^2$$

Thus, factor of safety against bearing capacity (*F.S.*) is,

$$F.S. = \frac{5852}{384.5} = 15.2 \quad (settlement\ governs\ \ design)$$

Thus, coefficient of subgrade reaction (*k*) is,

$$k = \frac{600}{0.020} = 30MN/m^3$$